RVH8400

Undermount Stainlesss Steel
Kitchen Sink Double Bowl

Features

- 16 gauge stainless steel
- Premium 304 grade stainless steel (18/10 Chromium/Nickel)
- Luxurious satin finish - Easy to clean and long-lasting
- Heavy duty sound guard padding and undercoating
- Slanted bottom with elegant drain grooves for easy draining
- Tight radius corners for easy cleaning
- Drain placement - Rear

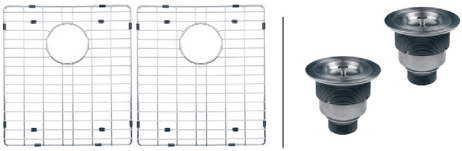

In the Box

- Cut out template
- Sink
- Mounting and installing brackets
- Two (2) basket strainers (drains)
- Bottom rinse grids (set of 2)

Dimensions

Model Number	Width	Length	Depth
RVH8400	43 3/4″ (overall) , 20 3/8″ (L) , 20 3/8″ (R)	23″	10″

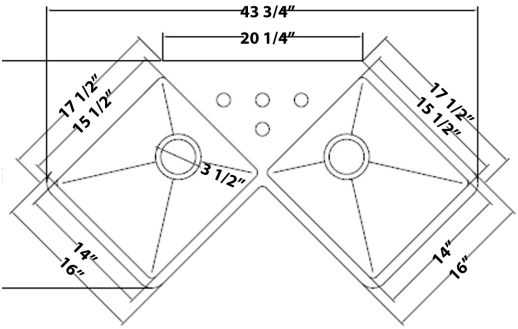

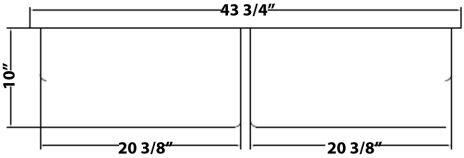

Attention Installer

1. Read these instructions carefully before installation. Inspect sink for damages. Do not install if the sink is damaged.

2. Ruvati recommends that installation of undermount sinks be done by a professional installer.

3. Templates are only provided as a guide. Place template on sink to ensure the template will give you the proper cutout for the sink. Ruvati is not responsible for improper sink or countertop installation. Ruvati is not liable for any damages to sink or countertop or personal injury during installation.

4. The instructions in this guide are for installation on a wood countertop. For installation on granite, marble or cultured stone countertops ask your fabricator for proper installation instructions. Remind your fabricator to install the sink in a way that it can be removed in the future from the countertop if necessary.

5. Observe all local plumbing and building codes.

Alignment of sink to cutout is critical for a superior fit and finished look. Depending on your aesthetic preference, Ruvati sinks can be installed either with a 1/4" reveal, flush fit, or with a negative reveal. Decide on your prefence prior to installation.

1/4" Reveal

The countertop edge sits approximately **1/4" back** from the edge of the sink and exposes the rim of the sink.

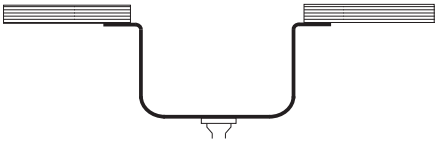

Flush Fit

The countertop meets the edge of the sink, **fitting flush** with the sink bowl.

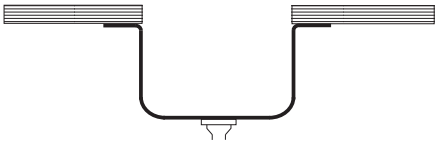

1/4" Overhang

The countertop **extends 1/4"** over the edge of the sink on all sides.

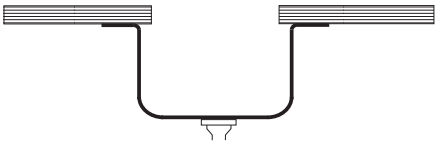

Installation

NOTE: The following instructions are for wood countertops. For granite, marble or solid stone countertops, ask your fabricator for installation instructions.

1. Place template on countertop. Position it such that the sink will have proper clearance from cabinet.

2. Trace a line around the template. Determine what "reveal" you want your sink to have (see previous page) and based on that, adjust the line accordingly. Cut along the line.

3. Turn the countertop upside down, and mark evenly-spaced positions for the anchors for the mounting clip. We recommend 3 mounting clips for the sink sides 20" and longer, and 2 mounting clips for the shorter sides. Drill holes for the anchors (following the countertop manufacturer's instructions) as shown below. Use a drill bit with stop block to avoid drilling through the countertop. Secure anchors into the countertop and fasten mounting clips loosely.
NOTE: For granite, marble or solid stone countertops we recommend using lead anchors which are glued to the countertop.

4. Clean the underside of the countertop and the rim of the sink. Using a good quality silicone caulk, apply silicone caulk evenly around the rim of the sink.

5. Place sink over the countertop opening. Tighten the screws until mounting clips are snug against sink.

6. Check alignment of sink to countertop opening and move slightly if you have to.

7. Tighten down clips evenly without overtightening. Remove excess silicone.

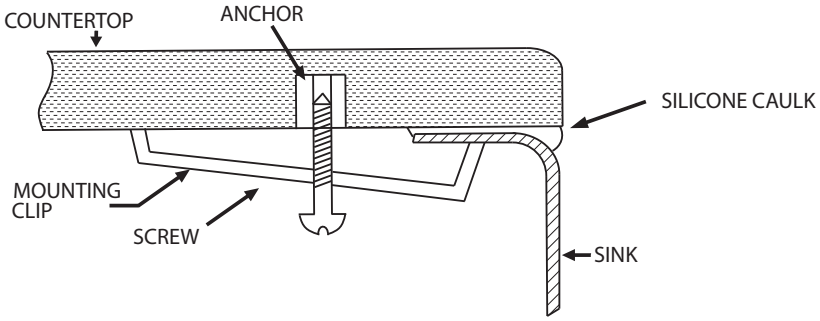

INSTALLATION SHOWN IN ZERO REVEAL MOUNT

Care and Maintenance

- Clean regularly with normal detergent and warm water.
- Always make a habit of drying your sink after use and buffing with a soft cloth. This will ensure that no build up of limescale or other mineral deposits can occur.
- Clean the sink once a week using a non-abrasive cleanser such as Comet and a clean soft sponge. Scrub in the same direction as the natural grain of the sink.
- ***Never*** let soap or other household cleaners to dry on the surface of the sink. Most products contain addatives which will affect the finish of the sink.
- ***Never*** use bleach solutions on the sink, as it is harmful to stainless steel. If left on the sink too long it can cause surface pitting.
- ***Never*** use a steel wool pad to clean your sink. Doing so may damage the sink's surface and cause discoloration.
- Minor scratching of the sink's surface is extremely difficult to avoid and is not something to be unduly concerned about. These marks are usually only superficial and can be removed with a proprietary stainless steel cleaner.
- Use of rinse grids will reduce exposure of the bottom of the sink to scratches.

RUVATI LIMITED LIFETIME WARRANTY

This product has been manufactured and inspected to the highest possible quality standards. Ruvati sinks carry a limited lifetime warranty for residential use.

Should you experience any defects in materials or workmanship within the warranty period, we will repair or replace the defective product, subject to the following conditions:

- Any claim made under this warranty must include a copy of a valid proof of purchase showing the date and place of purchase.
- Our obligation under this warranty is to the original purchaser only, and may not be transferred.
- Product replacement does not include shipping costs or labor installation costs.
- This warranty applies to residential installations only.
- Ruvati reserves the right to examine product in question and its installation prior to replacement.
- If an identical replacement product is not available, Ruvati reserves the right to replace the defective product with a similar product.

NOTE: Accessories such as rinse grids, cutting boards, strainers are not covered by this warranty.

This warranty relates to defects in manufacture, materials or workmanship in a Ruvati stainless steel kitchen sink supplied for installation into domestic premises in the United States. It does not extend to :

- Damage resulting from failure to maintain the product in accordance with the *Care and Maintenance* instructions in this manual.
- Normal wear and tear, scratches or accidental damage.
- Faults arising from improper use and/or installation.
- Defects in accessories, strainers and rinse grids.

All incidental or consequential damages are specifically excluded. No additional warranties, express or implied are given, including but not limited to, any implied warranty of merchantability or fitness for a particular purpose.

Some states do not allow the exclusion or limitation of incidental or consequential damages or limitations on how long an implied warranty lasts, so the above limitations or exclusions may not apply to you.

This warranty gives you specific legal rights, and you may also have other rights which vary from state to state.